Installation details for Ben Nevis Mountain multiplay (M1 11-LF)

Component list

| | |
|---|---|
| 1.2m H sections | 4 |
| 1.4m H sections | 2 |
| Square platforms | 4 |
| 1.4m slide, holder & foot | 1 |
| Ramp climber | 1 |
| Grab handle | 3 |
| Climb wall panel | 1 |
| Special hoop climber | 1 |
| Splat mirror panel | 1 |
| Platform connector | 1 |
| Firepole | 1 |
| Arch climber | 1 |
| Access net | 1 |
| Chain wall | 1 |
| Snake climber | 1 |

1) Construct base as per layout drawing 1 ensuring the correct levels for safety surfacing.
2) Excavate 400mm x 400mm holes for H sections as in drawing 2 to a depth of 750mm from finished surfacing level. (All H sections have finished ground level marks)
3) Connect the H sections to the platforms and place in to the excavated holes.
4) Connect together using the stated links. ie Special hoop climber & chain wall.
5) When all H sections and links have been fitted, level in all directions and check distances from edge of surfacing.area.
6) Mark out for access points as drawing 2 and excavate to a depth of 750 as before (850mm for the slide foot)
7) Assemble all other items of equipment as drawing 4 using M10 x 30 resistorx & nylon washers.
8) Note: M10 x 25 resistorx are used to connect the slide to the foot.
9) Connect the panel using M10 x 50 resistorx, steel washers x 2, nyloc & plastic cap sets.
10) Connect the chain using M10 x 30 resistorx, steel washer & tie rod connector.
11) Once all equipment is fitted check levels again, thighten all bolts & concrete in to the ground.

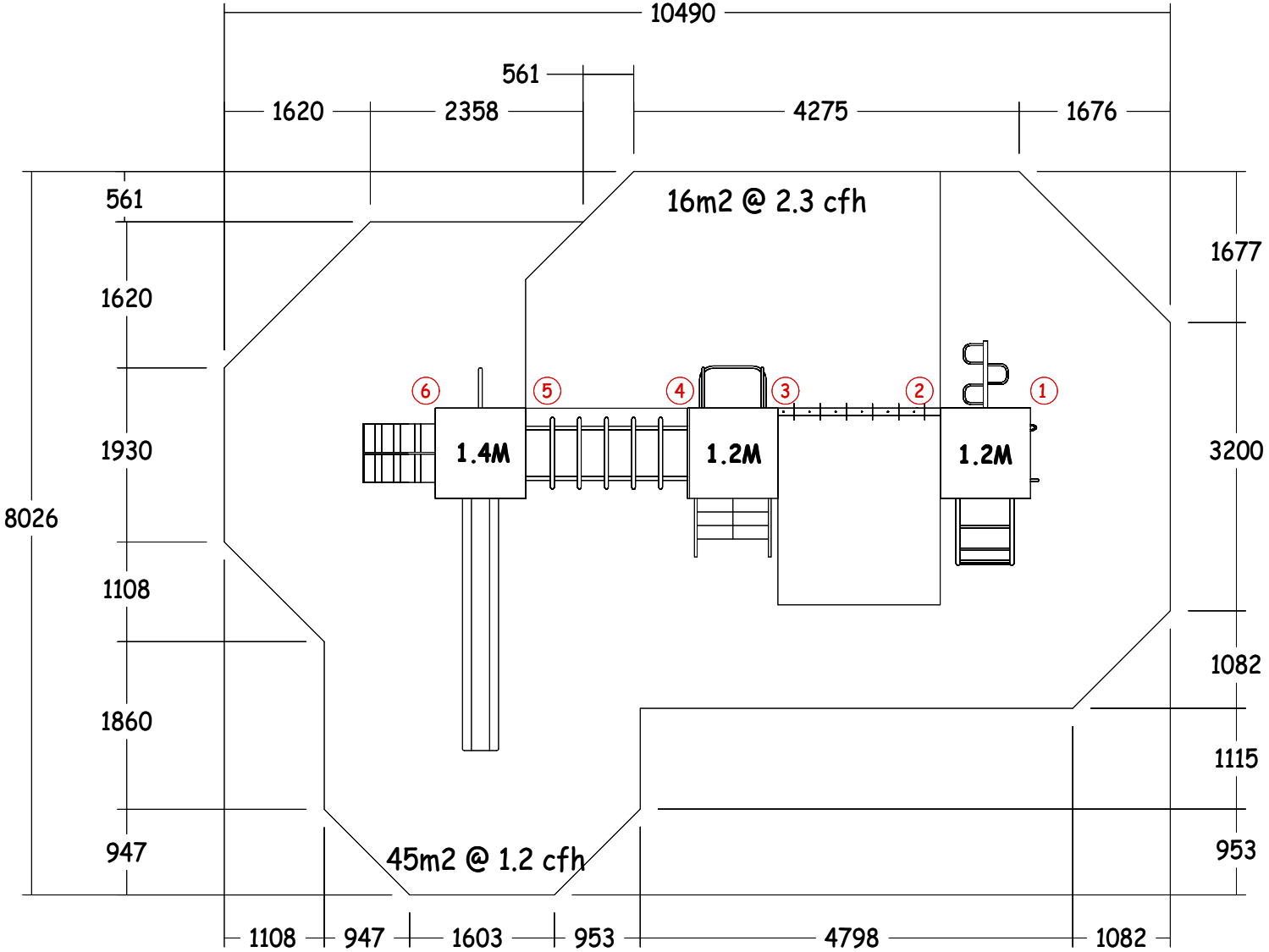


Play & Leisure

| | | | |
|---|---|---|---|
| DESCRIPTION | BEN NEVIS - BASE LAYOUT | | |
| SCALE | NTS | DATE 17/04/13 | DRG. No. I-MO10-1 |

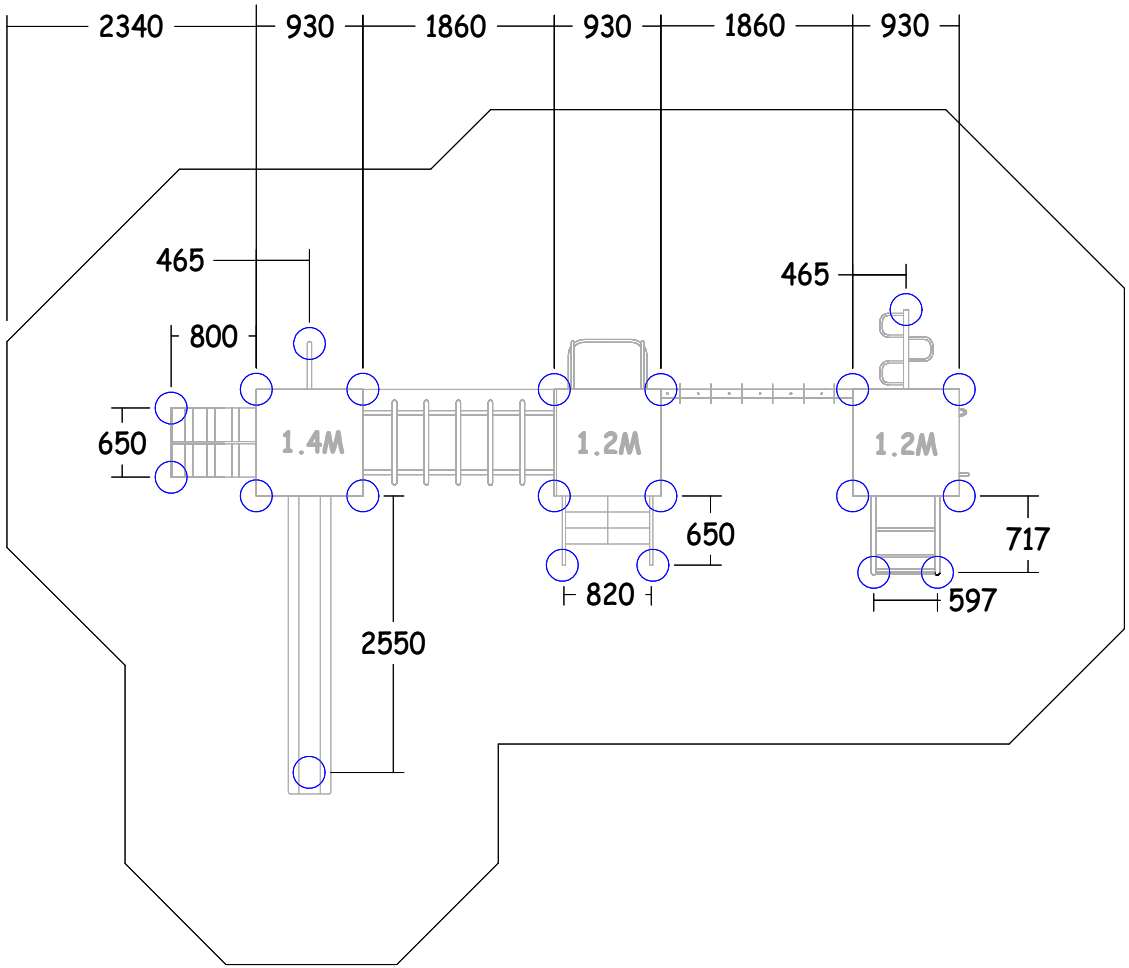


Play & Leisure

| | | | | | |
|---|---|---|---|---|---|
| DESCRIPTION | BEN NEVIS - HOLE LAYOUT | | | | |
| SCALE | NTS | DATE | 17/04/13 | DRG. No. | I-MO10-2 |

# MOUNTAIN - Ben Nevis M111

Follow us on:

MADE IN THE UK

25 Year Guarantee Against Structural Failure

All Play & Leisure's product range is fully compliant with **BS EN 1176:2008**

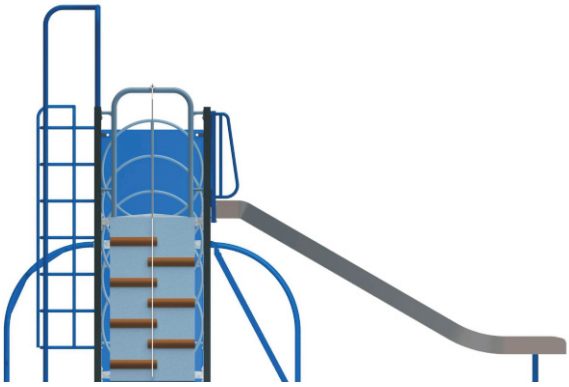

Side Elevation

## Features

1. Stainless Steel Slide
2. Access Chain Net
3. Arch Climber
4. Chain Wall
5. Fireman's Pole
6. Play Panel
7. Platform Connector
8. Ramp Climber
9. Snake Climber
10. Special Hoop Climber
11. Climb Wall

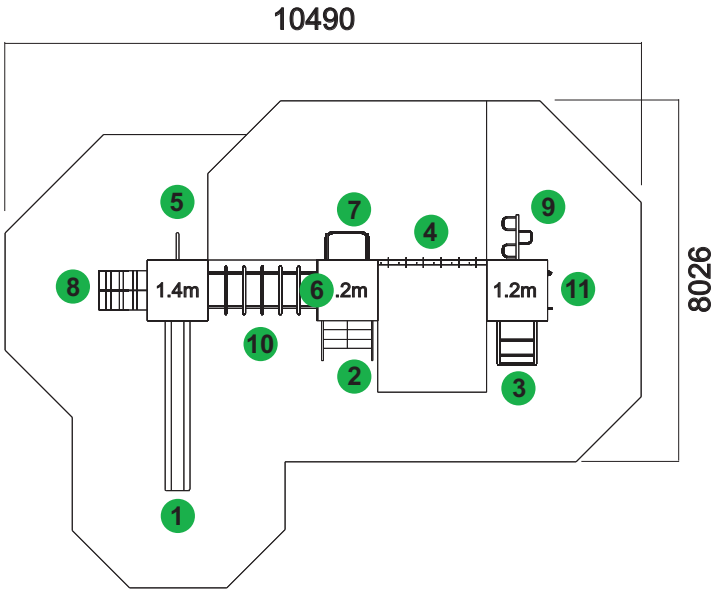


Plan View

| Technical AT-A-GLANCE |
|---|
| **Product Code** |
| *M111* |
| **Equipment Size** |
| *7398L x 4549W x 3200H* |
| **Minimum Space** |
| *10490 x 8026* |
| **Free Height of Fall** |
| *1400 & 2300* |
| **Safety Surface Area** |
| *45m² & 16m²* |

Play & Leisure

Play & Leisure Ltd. Units 6, 7 & 8 Catheralls Ind. Est. Pinfold Lane, Buckley, Flintshire. CH7 3PS
Tel: 01244 546797 Fax: 01244 549477 E:mail: sales@playandleisure.org.uk Website: www.playandleisure.org.uk

# Maintenance Schedule

**Maintenance & Inspection**
All Play & Leisure's products should be inspected and maintained in accordance with the recommendations as detailed in BS EN 1176-7:2008
If any part of the equipment is found to be unsafe during an inspection and cannot be immediately rectified the equipment should be protected against further use.

**Routine Visual Inspection.**
Routine visual inspections are to be conducted to identify obvious hazards resulting from vandalism, use or weather conditions. e.g. Hazards such as broken parts or broken bottles.

**Operational Inspection.**
To reduce accidents the operator should ensure an appropriate routine maintenance schedule is established, implemented and maintained. Inspection shall be carried out on a monthly basis, although consideration should be taken regarding local conditions and usage.

During a operational inspection the following should be included:

- Tightening of fastenings.
- Re-painting and re-treatment of surfaces.
- Maintenance of any impact attenuating surfaces.
- Lubrication of bearings.
- Marking of equipment to signify loose fill finished surface levels.
- Cleaning.
- Removal of broken glass and other debris or contaminants.
- Restoring loose fills to the correct level.
- Maintenance of free space areas.

**Annual Main Inspection (NOT EXCEEDING 12 MONTHS)**
Inspection intended to establish the overall level of safety of equipment, foundation and playing surfaces.
- Effects of weather.
- Rotting or corrosion.
- A change in the level of safety of the equipment as a result of repairs made, or of added or replaced components

**One Post Equipment Maintenance.**
Special attention should be paid to the stability of products being of a one post design.

**Corrective Maintenance.**
Corrective maintenance should include measures to correct defects, or to establish the necessary levels of safety of the playground equipment and surfaces. Such measures should include:

- Replacement of fastenings.
- Welding or welding repairs.
- Replacement of worn or defective parts.
- Replacement of defective structural components.

**Equipment Alterations.**
Alterations to parts of any products that could affect the essential safety of the equipment should only be carried out after consultation with Play and Leisure.

**Equipment Identification**
Information regarding the manufacturer, I.D. Number, year of manufacturer and the European Standard is displayed on an identification plaque.

**Play & Leisure Ltd. Unit 6, 7 & 8 Catheralls Ind. Est. Pinfold Lane, Buckley, Flintshire. CH7 3PS.**
**Tel: 01244 546797 Fax: 01244 549477 E:mail: sales@playandleisure.org.uk Website: www.playandleisure.org.uk**